EPI10

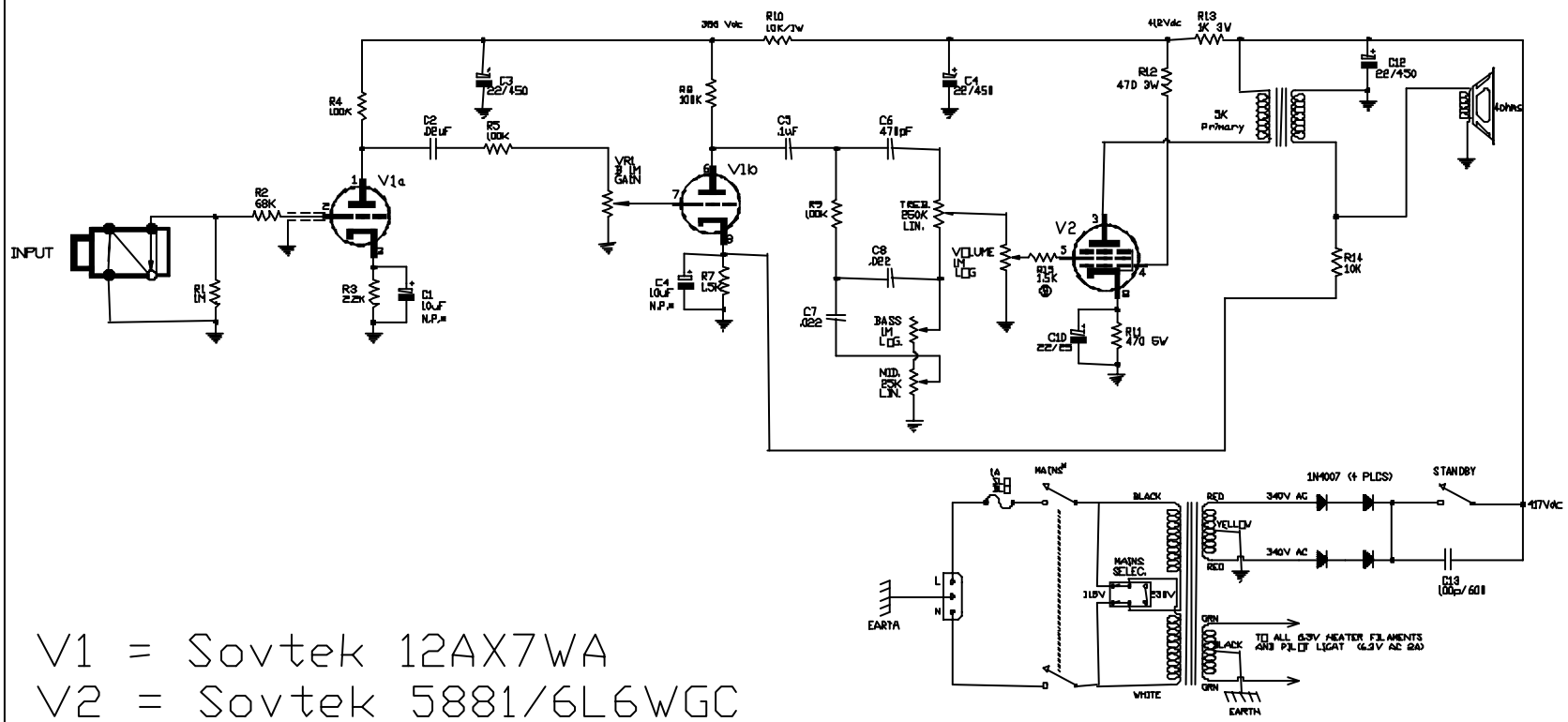

V1 = Sovtek 12AX7WA
V2 = Sovtek 5881/6L6WGC

Note: All resistors 1/2Watt unless noted.
Note: For 230V operation Fuse = .5A Slo Blo
*Note: Non Polarized electrolytic capacitors

VOLTAGE CHART

	TUBE TYPE	PIN #1	PIN #2	PIN #3	PIN #4	PIN #5	PIN #6	PIN #7	PIN #8	PIN #9
1	12AX7	281.8	0	2.34	H	H	251.1	0	1.83	H
2	5881/6L6		H	413	416	0		H	30.91	

LTR	REVISION	PCA NO.	DATE
A	removed R5 & R6		
B	added 1.5K resistor		

EPIPHONE CORP
645 MASSMAN DRIVE
NASHVILLE, TN 37210
(615) 871-4500

PART: GALAXIE TUBE 10
SCALE:
DATE: 12/16/00
MAT'L: NA
DRAWN: Richard T. Akers
CHK:
PART NO: EPI10