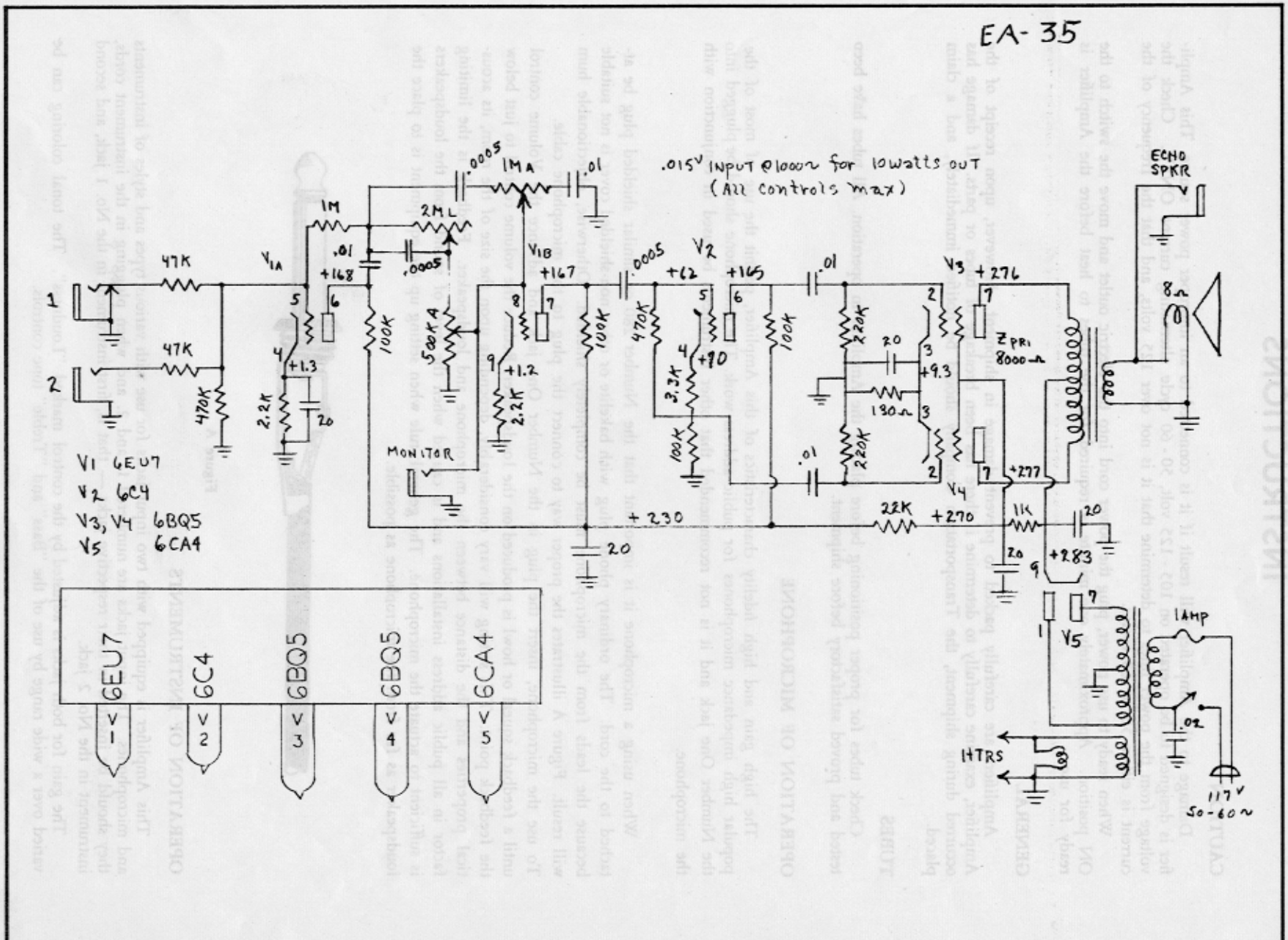
EA-35
.015V INPUT @1000~ for 10watts OUT
(All controls max)
ECHO SPKR
8Ω
1
2
47K
47K
470K
V1A
1M
2ML
.01
.0005
+168
+1.3
2.2K
20
100K
500KA
MONITOR
.0005
1MA
.01
V1B
+167
+1.2
2.2K
100K
.0005
V2
+62
+165
470K
+90
3.3K
100K
100K
.01
220K
220K
20
130Ω
+9.3
V3
+276
V4
+277
ZPRI 8000Ω
+230
20
22K
+270
1K
20
20
+283
V5
1AMP
.02
HTRS
117V 50-60~
V1 6EU7
V2 6C4
V3, V4 6BQ5
V5 6CA4
6EU7
6C4
6BQ5
6BQ5
6CA4
V 1
V 2
V 3
V 4
V 5