GA-60

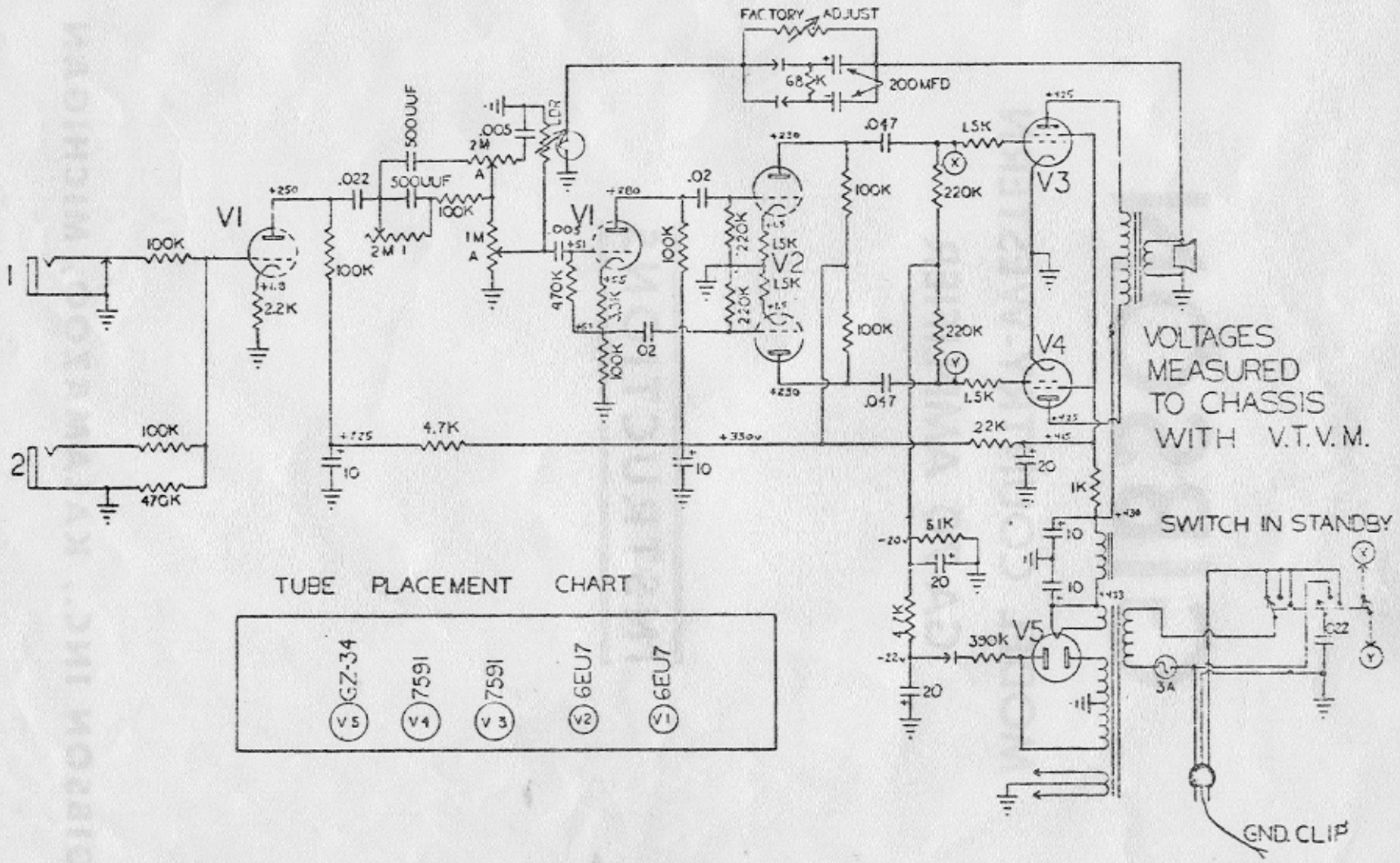
FACTORY ADJUST
200MFD
V1
V2
V3
V4
V5
100K
470K
2.2K
.022
500UUF
2M
1M
.005
LDR
.02
.047
1.5K
220K
4.7K
10
22K
20
1K
390K
3A
.022
VOLTAGES MEASURED TO CHASSIS WITH V.T.V.M.
SWITCH IN STANDBY
GND. CLIP
TUBE PLACEMENT CHART
GZ-34
7591
7591
6EU7
6EU7
V5
V4
V3
V2
V1