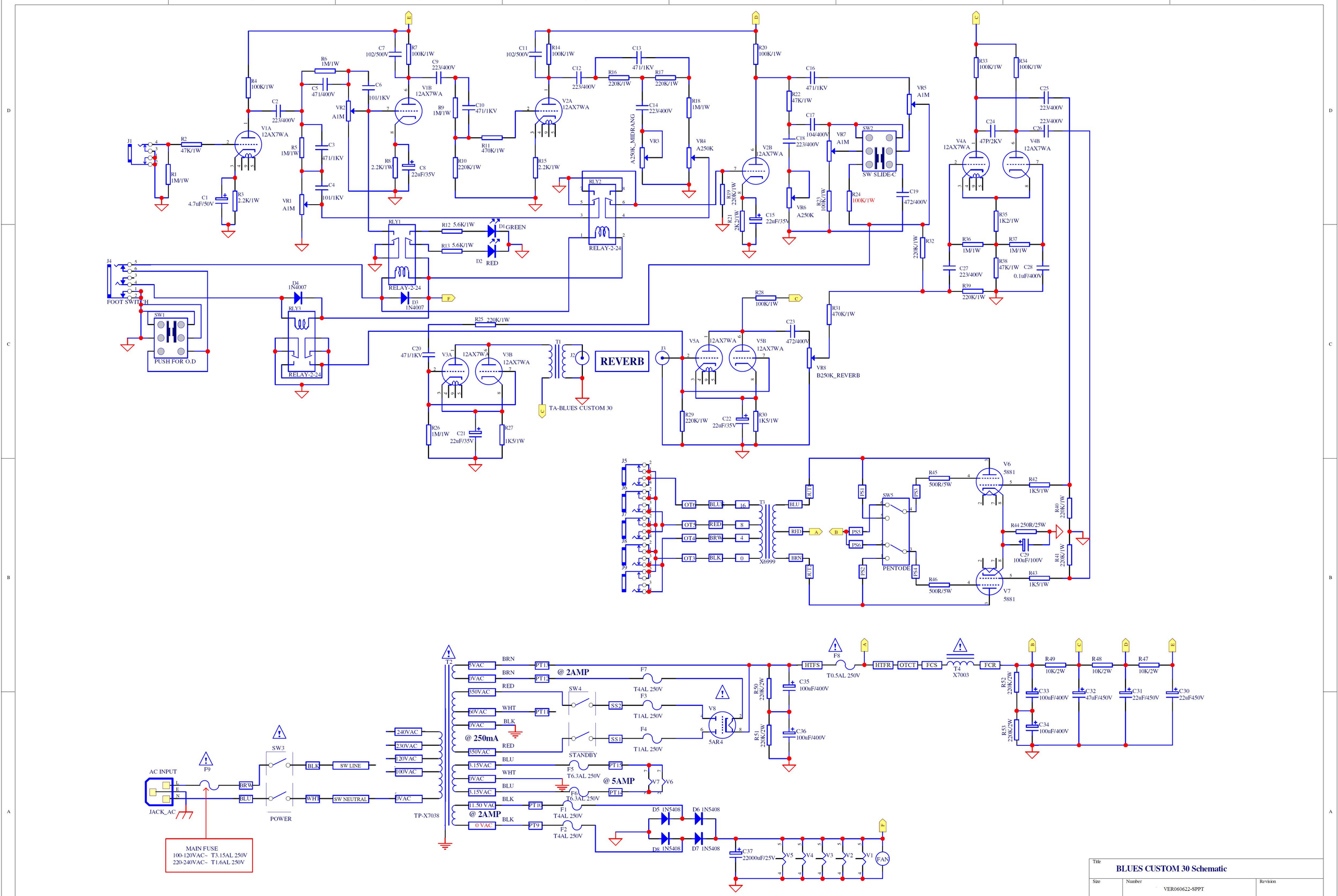
V1A 12AX7WA
V1B 12AX7WA
V2A 12AX7WA
V2B 12AX7WA
V3A 12AX7WA
V3B 12AX7WA
V4A 12AX7WA
V4B 12AX7WA
V5A 12AX7WA
V5B 12AX7WA
V6 5881
V7 5881
REVERB
TA-BLUES CUSTOM 30
FOOT SWITCH
PUSH FOR O.D
RELAY-2-24
A250K_MIDRANG
SW SLIDE-C
PENTODE
X6999
T2
TP-X7038
T4 X7003
5AR4
AC INPUT
JACK_AC
POWER
SW LINE
SW NEUTRAL
MAIN FUSE
100-120VAC~ T3.15AL 250V
220-240VAC~ T1.6AL 250V
@ 2AMP
@ 250mA
@ 5AMP
@ 2AMP
STANDBY
FAN
Title
BLUES CUSTOM 30 Schematic
Size
Number
VER060622-SPPT
Revision
Date: 8/25/2006
File:
DESIGNED BY PYOTR BELOV
DRAWN BY PYOTR BELOV