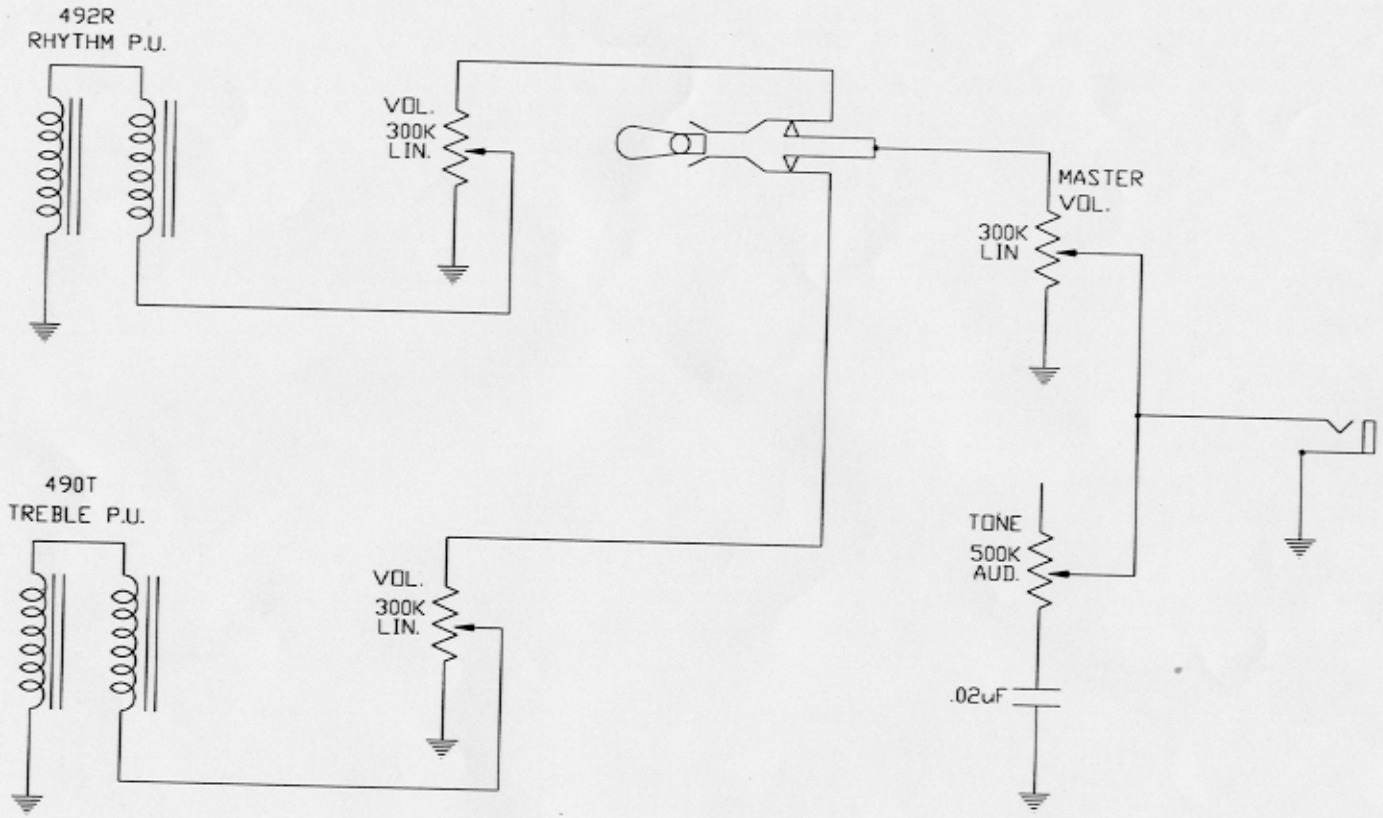

Note: Tailpiece to be connected to common ground.

NOTE:
THIS DRAWING AND ALL OF THE INFORMATION HEREON ARE THE CONFIDENTIAL PROPERTY OF GIBSON, INC. AND MAY NOT BE REPRODUCED OR USED FOR ANY PURPOSE EXCEPT AS EXPRESSLY AUTHORIZED IN WRITING BY GIBSON, INC.

LTR	REVISION	PCA NO.	DATE	GIBSON GUITAR CORP. 641 MASSMAN DRIVE NASHVILLE, TN 37210 (615) 391-1580	PART: ARCT/ ARCA/ SCHEMATIC		
					SCALE:	DATE: 8/16/95	MAT'L:
					DRAWN: R.T.A.	CHK:	PART NO. SCH-ARCT